BD exhaust air

CL 600

© BIG DUTCHMAN GROUP

BD chimney CL 600

- regulation 0-100% (CL-74C)
- Parts of plastics
- construction set
- strong roof plate
- Material PP (Polypropylene)
- Easy to mount

© BIG DUTCHMAN GROUP

BD chimney CL 600

water outlet in the diffuser integrated

© BIG DUTCHMAN GROUP

BD chimney
CL 600

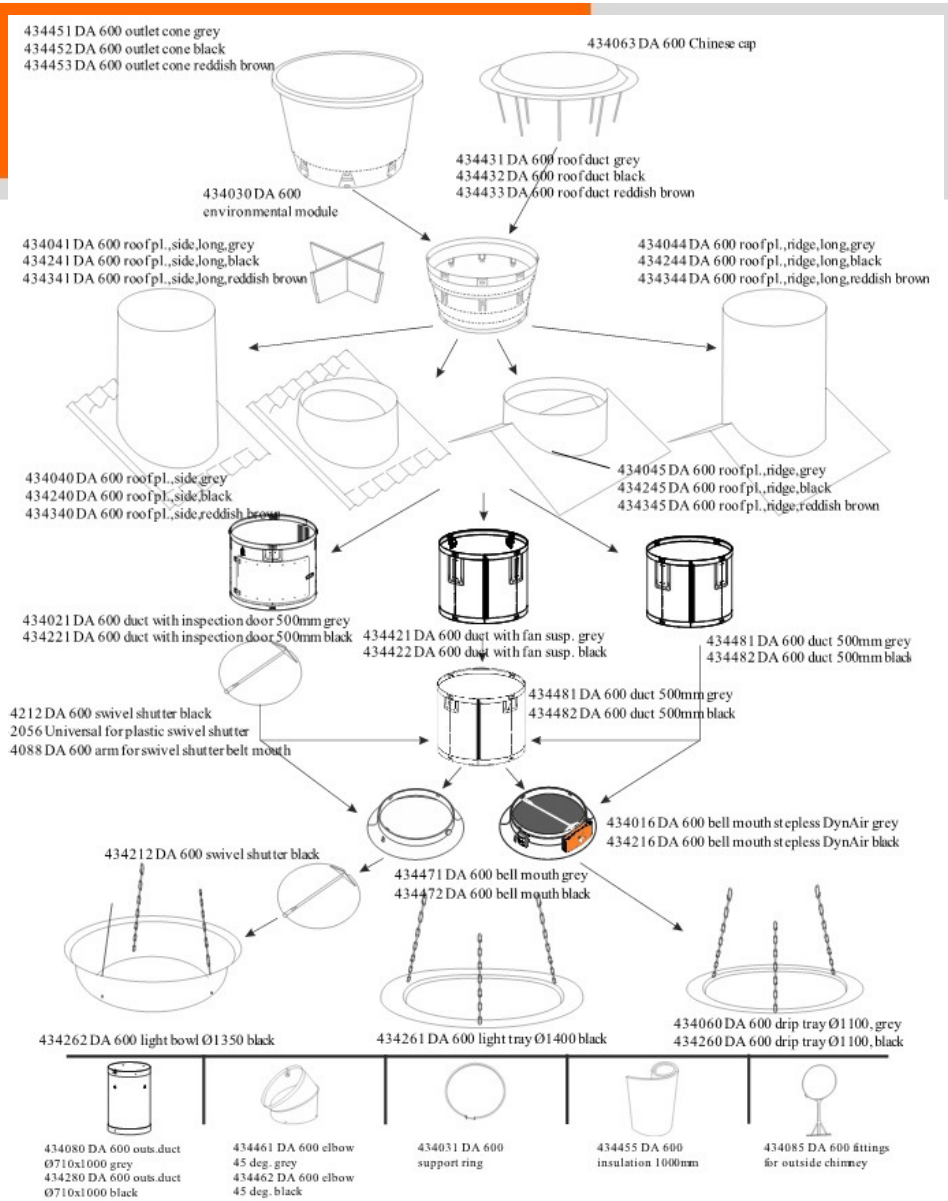

© BIG DUTCHMAN GROUP